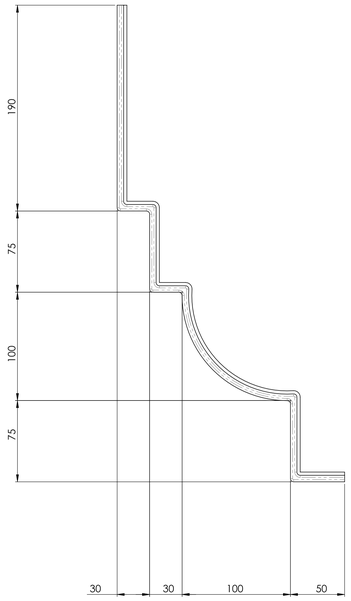

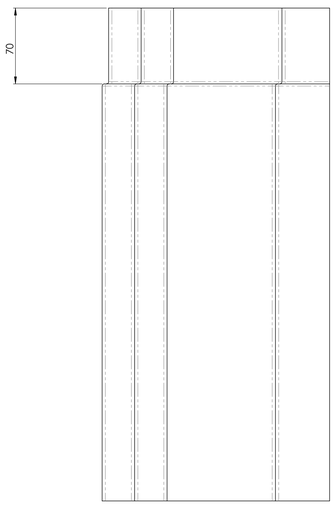

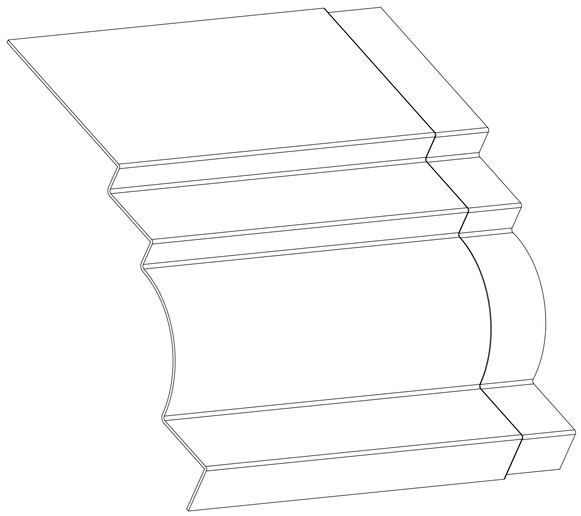

MATERIAL :

HEAT TREATMENT :

FINISH :

Harrison Thompson & co Ltd
Yeoman House
Whitehall Estate
Whitehall Road
Leeds
LS12 5JB
sallyann@yeomanshield.co.uk
Tel -01132 795854

YEOMAN SHIELD
WALL & DOOR PROTECTION

REV	DATE	DRAWN	CHK'D	APPV'D	MODIFICATION
0	09/06/2020	DESCON			FIRST ISSUE

TITLE: TYPE G CORNICE FASCIA LIP

DEBUR AND BREAK SHARP EDGES

GENERAL TOLERANCES (UNLESS OTHERWISE STATED):
0 ±0.5
0.0 ±0.25
0.00 ±0.1

WEIGHT (Kg)

UNLESS OTHERWISE SPECIFIED:
DIMENSIONS ARE IN MILLIMETERS

DO NOT SCALE DRAWING

SHEET SIZE : A0 | SCALE:1:1 | SHEET 1 OF 1

DWG NO. | REVISION: 0